# LTM1060-3.1

# 60T

## CARACTÉRISTIQUES TECHNIQUES

| | |
|---|---|
| • Nombre d'essieux | 3 |
| • Poids total de la grue | 60T (20T/essieu) |
| • Plaques de répartition | 1m X 1m X 0,06m |
| • Contrepoids jusque | 12,8T |
| • HA | 10,3m à 48m |

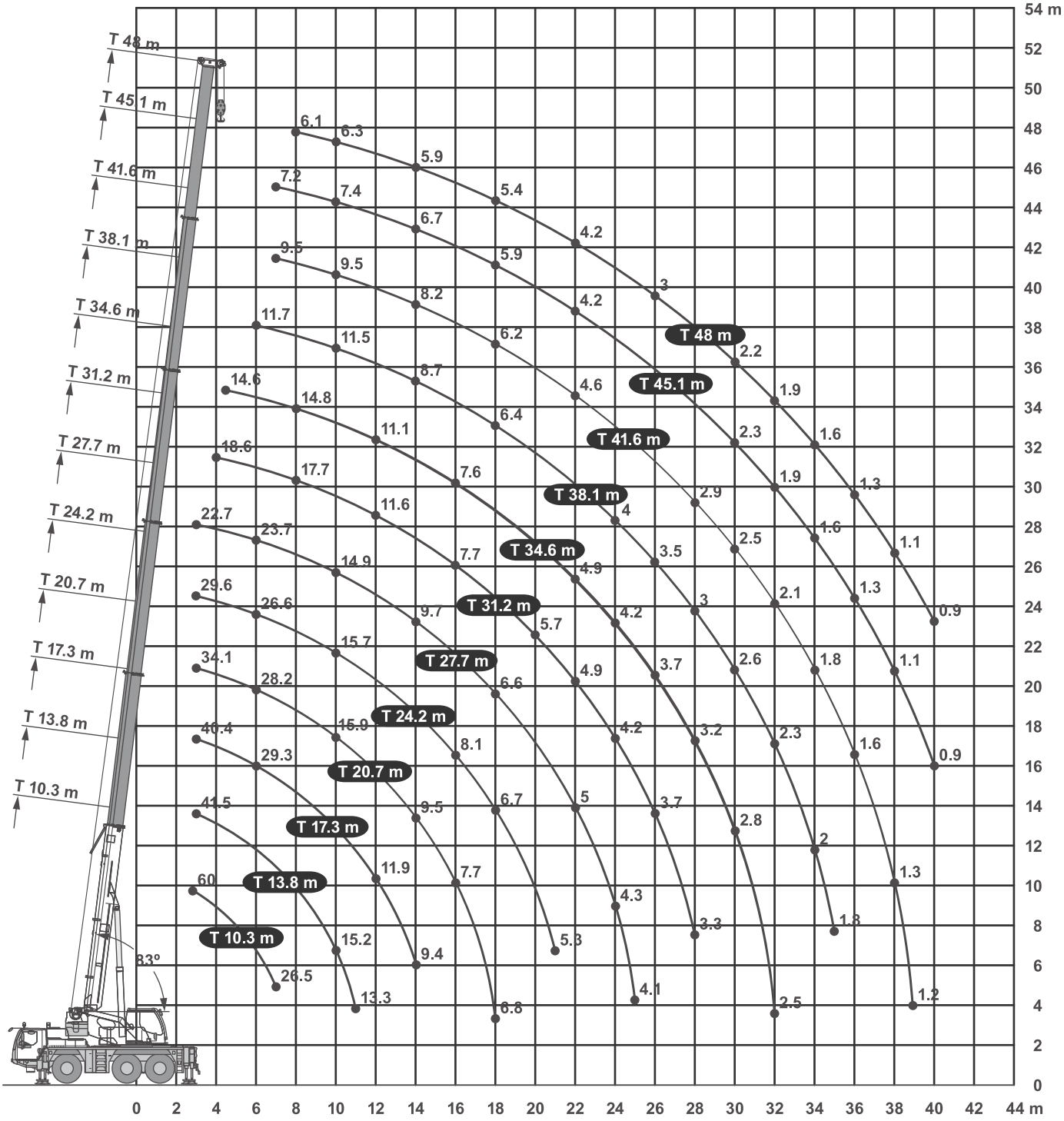

# 60T

## LTM1060-3.1

GROUPE DUFOUR

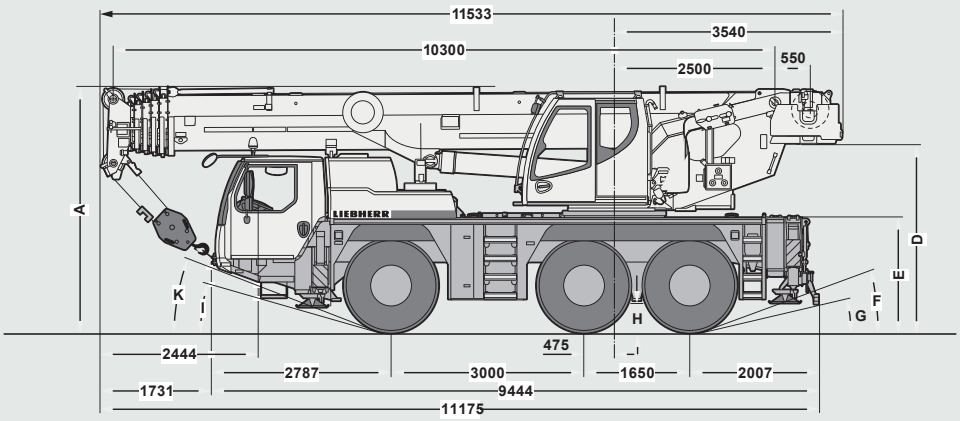


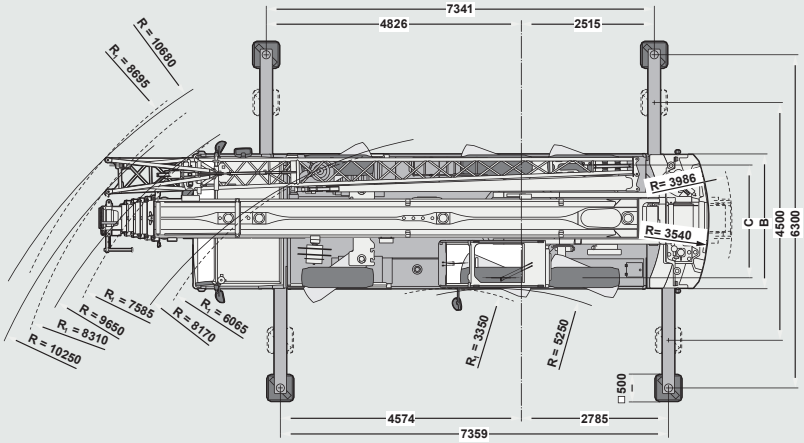


| m | 10.3m* | 10.3m | 13.8m | 17.3m | 20.7m | 24.2m | 27.7m | 31.2m | 34.6m | 38.1m | 41.6m | 45.1m | 48m |
|---|---|---|---|---|---|---|---|---|---|---|---|---|---|
| 2.1 | 60 | | | | | | | | | | | | |
| 2.4 | 58.8 | | | | | | | | | | | | |
| 2.5 | 58.2 | | | | | | | | | | | | |
| 3 | 54.6 | 42.3 | 41.5 | 40.4 | 34.1 | 29.6 | 22.7 | | | | | | |
| 3.5 | 49.9 | 42.3 | 42.2 | 40.7 | 34.4 | 30 | 23.2 | | | | | | |
| 4 | 44.5 | 40.5 | 40.2 | 38.1 | 34.8 | 30.2 | 23.6 | 18.6 | | | | | |
| 4.5 | 39.8 | 37.2 | 36.9 | 34.9 | 33.3 | 29.9 | 24 | 18.9 | 14.6 | | | | |
| 5 | 36.4 | 34.2 | 34.3 | 32.9 | 31.1 | 29.6 | 24.1 | 19.1 | 14.8 | | | | |
| 6 | 31.6 | 28.7 | 29.1 | 29.3 | 28.2 | 26.6 | 23.7 | 19.2 | 15 | 11.7 | | | |
| 7 | 26.5 | 24.1 | 24.6 | 24.8 | 24.8 | 23.9 | 22.9 | 18.7 | 15.1 | 12 | 9.5 | 7.2 | |
| 8 | | | 20.9 | 21.1 | 21.3 | 20.9 | 9.7 | 17.7 | 14.8 | 12.1 | 9.6 | 7.4 | 6.1 |
| 9 | | | 17.8 | 18.3 | 18.5 | 18 | 7 | 15.9 | 14.2 | 11.9 | 9.7 | 7.4 | 6.2 |
| 10 | | | 15.2 | 15.8 | 15.9 | 15.7 | 14.9 | 14.3 | 13.3 | 11.5 | 9.5 | 7.4 | 6.3 |
| 11 | | | 13.3 | 13.7 | 13.7 | 13.6 | 13.1 | 12.6 | 12.2 | 11 | 9.2 | 7.3 | 6.3 |
| 12 | | | | 11.9 | 12 | 11.9 | 11.7 | 11.6 | 11.1 | 10.4 | 8.8 | 7.1 | 6.2 |
| 13 | | | | 10.6 | 10.6 | 10.5 | 10.5 | 10.5 | 10.2 | 9.7 | 8.5 | 6.9 | 6.1 |
| 14 | | | | 9.4 | 9.5 | 9.4 | 9.7 | 9.4 | 9.3 | 8.7 | 8.2 | 6.7 | 5.9 |
| 15 | | | | | 8.5 | 8.9 | 8.7 | 8.5 | 8.4 | 8 | 7.8 | 6.5 | 5.8 |
| 16 | | | | | 7.7 | 8.1 | 7.9 | 7.7 | 7.6 | 7.6 | 7.2 | 6.3 | 5.7 |
| 17 | | | | | 7 | 7.3 | 7.2 | 7 | 7.1 | 7 | 6.6 | 6.1 | 5.5 |
| 18 | | | | | 6.8 | 6.7 | 6.6 | 6.6 | 6.5 | 6.4 | 6.2 | 5.9 | 5.4 |
| 19 | | | | | | 6.2 | 6 | 6.2 | 6 | 5.9 | 5.8 | 5.5 | 5.2 |
| 20 | | | | | | 5.7 | 5.7 | 5.7 | 5.5 | 5.5 | 5.4 | 5 | 4.9 |
| 21 | | | | | | 5.3 | 5.4 | 5.2 | 5.2 | 5.1 | 5 | 4.6 | 4.5 |
| 22 | | | | | | | 5 | 4.9 | 4.9 | 4.7 | 4.6 | 4.2 | 4.2 |
| 23 | | | | | | | 4.7 | 4.5 | 4.5 | 4.4 | 4.2 | 3.9 | 3.9 |
| 24 | | | | | | | 4.3 | 4.2 | 4.2 | 4 | 3.9 | 3.6 | 3.6 |
| 25 | | | | | | | 4.1 | 3.9 | 3.9 | 3.7 | 3.6 | 3.3 | 3.3 |
| 26 | | | | | | | | 3.7 | 3.7 | 3.5 | 3.3 | 3.1 | 3 |
| 27 | | | | | | | | 3.5 | 3.4 | 3.2 | 3.1 | 2.8 | 2.8 |
| 28 | | | | | | | | 3.3 | 3.2 | 3 | 2.9 | 2.6 | 2.6 |
| 29 | | | | | | | | | 3 | 2.8 | 2.7 | 2.4 | 2.4 |
| 30 | | | | | | | | | 2.8 | 2.6 | 2.5 | 2.3 | 2.2 |
| 31 | | | | | | | | | 2.6 | 2.4 | 2.3 | 2.1 | 2.1 |
| 32 | | | | | | | | | 2.5 | 2.3 | 2.1 | 1.9 | 1.9 |
| 33 | | | | | | | | | | 2.1 | 2 | 1.7 | 1.8 |
| 34 | | | | | | | | | | 2 | 1.8 | 1.6 | 1.6 |
| 35 | | | | | | | | | | 1.8 | 1.7 | 1.5 | 1.5 |
| 36 | | | | | | | | | | | 1.6 | 1.3 | 1.3 |
| 37 | | | | | | | | | | | 1.4 | 1.2 | 1.2 |
| 38 | | | | | | | | | | | 1.3 | 1.1 | 1.1 |
| 39 | | | | | | | | | | | 1.2 | 1 | 1 |
| 40 | | | | | | | | | | | | 0.9 | 0.9 |